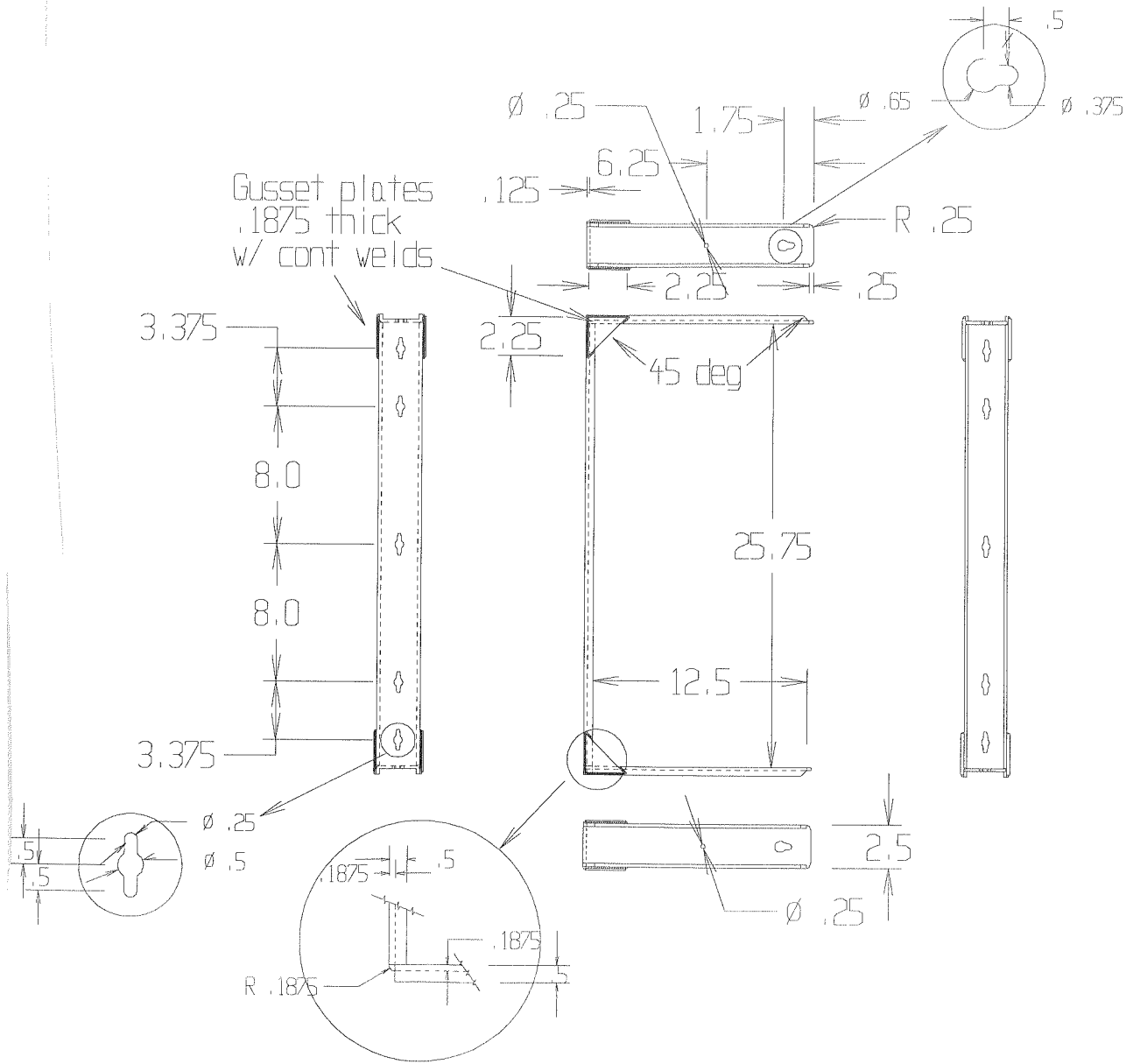
.5
Ø .25
1.75
Ø .65
Ø .375
6.25
.125
Gusset plates
.1875 thick
w/ cont welds
R .25
2.25
.25
3.375
2.25
45 deg
8.0
25.75
8.0
12.5
3.375
Ø .25
.5
Ø .5
.5
.1875
.5
.1875
R .1875
.5
2.5
Ø .25

Y
X